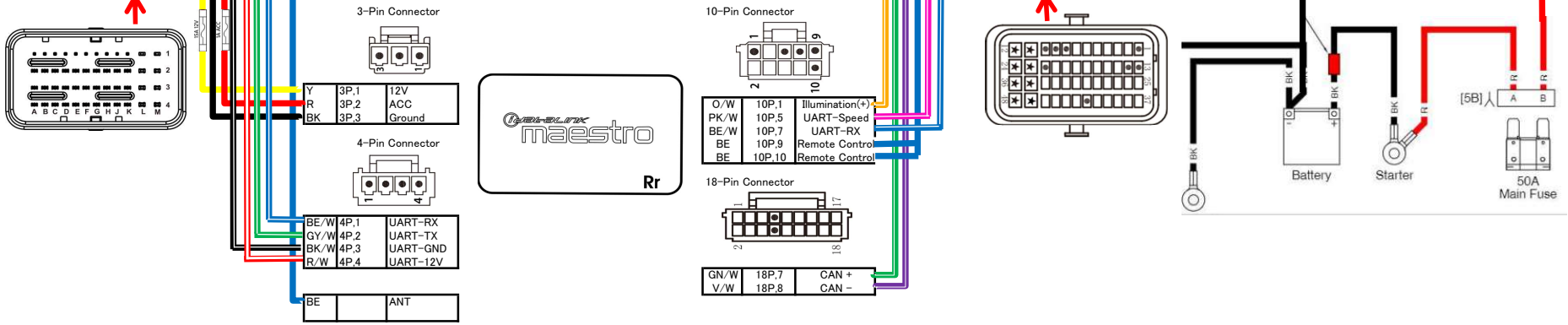HDHU14Si Radio	HDHU14Si wire harness		OEM Radio harness				
	A1		GN/W	1	A1	W/R	CAN High
	A2		V/W	13	A2	W/BK	CAN Low
	A3			25	A3	W/BN	AUX CAN Low
	A4			37	A4	W/PK	AUX CAN High
	B1			2	B1	BK	Ground
	B2		BE	14	B2	LBE/PK	Rear Switch Input
	B3			26	B3		
	B4			38	B4		
	C1			3	C1	R	Front Microphone(+)
	C2			15	C2	BK	Microphone Common(−)
	C3			27	C3	R	Microphone Sum Out(+)
	C4			39	C4		
	D1			4	D1	R/W	Rear Microphone(+)
	D2			16	D2	BK/W	Microphone Shield
	D3			28	D3	BK	Microphone Snm Out(−)
	D4			40	D4		
	E1			5	E1	LBE/W	Left Rear Headset(+)
	E2			17	E2	LBE/V	Right Rear Headset(+)
	E3			29	E3	BK/PK	Headset Common(−)
UART-Speed	E4	PK/W		41	E4		
	F1			6	F1	PK/GN	Left Front Headset(+)
	F2			18	F2	PK/BE	Right Flont Headset(+)
	F3			30	F3		
UART-TX	F4	GN/W	BE/W	42	F4	LBE/BN	External AMP Power Control
	G1			7	G1		
	G2			19	G2		
	G3			31	G3		
UART-RX	G4	BE/W		43	G4		
Left Rear Speaker(−)	H1	GN/BK	GN/BK	8	H1	LBE/GY	Left Rear Speaker(−)
	H2			20	H2	R	Andio In 1 Right(+)
	H3			32	H3	BK	Audio In 1 Shield/Mono(−)
UART-12V	H4	R/W		44	H4		
Left Rear Speaker(+)	J1	GN	GN	9	J1	LBE/O	Left Rear Speaker(+)
	J2			21	J2	W	Audio In 1 Left/Mono(+)
Illumination(+)	J3	O/W		33	J3	W	Audio In 3 Left/Mono(+)
UART-GND	J4	BK/W		45	J4		
Right Rear Speaker(+)	K1	V	V	10	K1	LBE	Right Rear Speaker(+)
Right Rear Speaker(−)	K2	V/BK	V/BK	22	K2	LBE/BK	Right Rear Speaker(−)
ANT	K3	BE		34	K3	R	Audio In 3 Right(+)
ACC turn-on	K4	R		46	K4	BK/Y	Audio In 3 Shild/mono(−)
Left Front Speaker(−)	L1	W/BK	W/BK	11	L1	PK/GY	Left Front Speaker(−)
Left Front Speaker(+)	L2	W	W	23	L2	PK/O	Left Front Speaker(+)
Ground	L3	BK	BK	35	L3	BK	Ground
Ground	L4	BK	BK	47	L4	BK	Ground
Right Flont Speaker(+)	M1	GY	GY	12	M1	PK	Right Flont Speaker(+)
Right Flont Speaker(−)	M2	GY/BK	GY/BK	24	M2	PK/BK	Right Flont Speaker(−)
Battery(+) 12V	M3	Y	Y	36	M3	R/PK	Radio Fuse
Battery(+)	M4	Y	Y	48	M4	R/PK	Radio Fuse